Plastic pillow block housing bearing is widely used in food machines, equipments, etc. the material used on the power transmission parts for application of the food machinery, refrigeration equipment, medical machinery etc have also been further improved:anti-bacterial,acid and alkali-resistant, washable (rust-resistance),

Plummer housing：Bearing with adapter sleeve

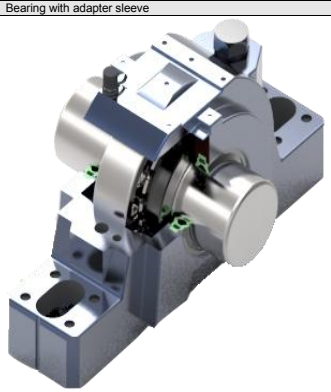

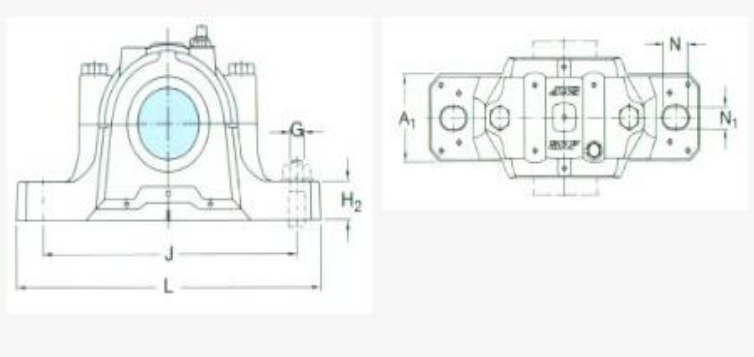

Motion(shanghai)Industrial Development Co.,Ltd

Shaft diameter	Pillow Blocks										Weight	Designation				Shaft diameter	Housing bore		Total width of seals		For bearing and assembles					
d_a	A	A_1	H	H_1	H_2	J	L	N	N_1	G		Pillow blocks with seals	Assemble Pillow Blocks	Seals	End covers	d_a	C_a	D_a	A_2	A_3	Self-aligning ball bearings Sphercial Roller	Adapter Sleeve	locating rings two required each pillow block	Self-aligning ball bearings Sphercial Roller CARBBearing	Adapter Sleeve	locating rings two required each pillow block
20	67	46	74	70	19	130	165	20	15	12	1.45	SNL505TG	SNL505	TSN505G	ASNH505	20	25	52	80	125	1205EK	H205	FRB5/52	2205EK	H305	FRB3.5/52
20	67	46	74	70	19	130	165	20	15	12	1.45	SNL505TA	SNL505	TSN505A	ASNH505	20	25	52	80	125	–	–	–	22205EK	H305	FRB3.5/52
20	67	46	74	70	19	130	165	20	15	12	1.45	SNL505TS	SNL505	TSN505S	ASNH505	20	25	52	80	125				C2205K	H305E	FRB3.5/52
20	67	46	74	70	19	130	165	20	15	12	1.45	SNL505TND	SNL505	TSN505ND	ASNH505	20	32	62	89	135	1305EK	H305	FRB7.5/62	2305EK	H2305	FRB4/62
20	77	52	89	50	22	150	185	20	15	12	2.00	SNL605TG	SNL506-605	TSN605G	ASNH506-605	20	32	62	89	135	–	–	–	–	–	–
20	77	52	89	50	22	150	185	20	15	12	2.00	SNL605TA	SNL506-605	TSN605A	ASNH506-605	20	32	62	89	135				–	–	–
20	77	52	89	50	22	150	185	20	15	12	2.00	SNL605TS	SNL506-605	TSN605S	ASNH506-605	25	32	62	89	135	1206EK	H206	FRB8/62	2206EK	H306	FRB6/62
20	77	52	89	50	22	150	185	20	15	12	2.00	SNL605TND	SNL506-605	TSN605ND	ASNH506-605	25	32	62	89	135	–	–	–	22206EK	H306	FRB6/62
25	77	52	89	50	22	150	185	20	15	12	2.00	SNL506TG	SNL506-605	TSN506G	ASNH506-605	25	32	62	89	135				C2206K	H306E	FRB6/62
25	77	52	89	50	22	150	185	20	15	12	2.00	SNL506TA	SNL506-605	TSN506A	ASNH506-605	25	34	72	94	140	1306EK	H306	FRB7.5/72	2306K	H2306	FRB3.5/72
25	77	52	89	50	22	150	185	20	15	12	2.00	SNL506TS	SNL506-605	TSN506S	ASNH506-605	25	34	72	94	140	21306CCK	H306	FRB7.5/72	–	–	–
25	77	52	89	50	22	150	185	20	15	12	2.00	SNL506TND	SNL506-605	TSN506ND	ASNH506-605	25	34	72	94	140				–	–	–
25	82	52	93	50	22	150	185	20	15	12	2.20	SNL606TG	SNL507-606	TSN606G	ASNH507-606	30	34	72	94	145	1207EK	H207	FRB8.5/72	2207EK	H307	FRB5.5/72
25	82	52	93	50	22	150	185	20	15	12	2.20	SNL606TA	SNL507-606	TSN606A	ASNH507-606	30	34	72	94	145	–	–	–	22207EK	H307	FRB5.5/72
25	82	52	93	50	22	150	185	20	15	12	2.20	SNL606TS	SNL507-606	TSN606S	ASNH507-606	30	34	72	94	145				C2207K	H307E	FRB5.5/72
25	82	52	93	50	22	150	185	20	15	12	2.20	SNL606TND	SNL507-606	TSN606ND	ASNH507-606	30	39	80	97	145	1307EK	H307	FRB9/80	2307EK	H2307	FRB4/80
30	82	52	93	50	22	150	185	20	15	12	2.20	SNL507TG	SNL507-606	TSN507G	ASNH507-606	30	39	80	97	145	21307CCK	H307	FRB9/80	–	–	–
30	82	52	93	50	22	150	185	20	15	12	2.20	SNL507TA	SNL507-606	TSN507A	ASNH507-606	30	39	80	97	145				–	–	–
30	82	52	93	50	22	150	185	20	15	12	2.20	SNL507TS	SNL507-606	TSN507S	ASNH507-606	35	39	80	97	150	1208EK	H208	FRB10.5/80	2208EK	H308	FRB8/80
30	82	52	93	50	22	150	185	20	15	12	2.20	SNL507TND	SNL507-606	TSN507ND	ASNH507-606	35	39	80	97	150	–	––	–	22208EK	H308	FRB8/80
30	85	60	108	60	25	170	205	20	15	12	2.90	SNL607TG	SNL508-607	TSN607G	ASNH508-607	35	39	80	97	150				C2208K	H308E	FRB8/80
30	85	60	108	60	25	170	205	20	15	12	2.90	SNL607TA	SNL508-607	TSN607A	ASNH508-607	35	41	90	102	150	1308EK	H308	FRB9/90	2308EK	H2308	FRB4/90
30	85	60	108	60	25	170	205	20	15	12	2.90	SNL607TS	SNL508-607	TSN607S	ASNH508-607	35	41	90	102	150	21308CCK	H308	FRB9/90	22308EK	H2308	FRB4/90
30	85	60	108	60	25	170	205	20	15	12	2.90	SNL607TND	SNL508-607	TSN607ND	ASNH508-607									–	–	–
35	85	60	108	60	25	170	205	20	15	12	2.90	SNL508TG	SNL508-607	TSN508G	ASNH508-607											
35	85	60	108	60	25	170	205	20	15	12	2.90	SNL508TA	SNL508-607	TSN508A	ASNH508-607											
35	85	60	108	60	25	170	205	20	15	12	2.90	SNL508TS	SNL508-607	TSN508S	ASNH508-607											

35	85	60	108	60	25	170	205	20	15	12	2,90	SNL508TND	SNL508-607	TSN508ND	ASNH508-607											
35	90	60	113	60	25	170	205	20	15	12	3,20	SNL608TG	SNL510-608	TSN608G	ASNH510-608											
35	90	60	113	60	25	170	205	20	15	12	3,20	SNL608TA	SNL510-608	TSN608A	ASNH510-608											
35	90	60	113	60	25	170	205	20	15	12	3,20	SNL608TS	SNL510-608	TSN608S	ASNH510-608											
35	90	60	113	60	25	170	205	20	15	12	3,20	SNL608TND	SNL510-608	TSN608ND	ASNH510-608											
40	85	60	109	60	25	170	205	20	15	12	2,90	SNL509TG	SNL509	TSN509G	ASNH509	40	30	85	97	150	1209EK	H209	FRB5.5/85	2209EK	H309	FRB3.5/85
40	85	60	109	60	25	170	205	20	15	12	2,90	SNL509TA	SNL509	TSN509A	ASNH509	40	30	85	97	150	–	–	–	22209EK	H309	FRB3.5/85
40	85	60	109	60	25	170	205	20	15	12	2,90	SNL509TS	SNL509	TSN509S	ASNH509	40	30	85	97	150				C2209K	H309E	FRB3.5/85
40	85	60	109	60	25	170	205	20	15	12	2,90	SNL509TND	SNL509	TSN509ND	ASNH509	40	44	100	107	155	1309EK	H309	FRB9.5/100	2309EK	H2309	FRB4/100
40	95	70	128	70	28	210	255	24	18	16	4,40	SNL609TG	SNL511-609	TSN609G	ASNH511-609	40	44	100	107	155	21309EK	H309	FRB9.5/100	22309EK	H2309	FRB4/100
40	95	70	128	70	28	210	255	24	18	16	4,40	SNL609TA	SNL511-609	TSN609A	ASNH511-609	40	44	100	107	155				–	–	–
40	95	70	128	70	28	210	255	24	18	16	4,40	SNL609TS	SNL511-609	TSN609S	ASNH511-609	45	41	90	102	155	1210EK	H210	FRB10.5/90	2210EK	H310	FRB9/90
40	95	70	128	70	28	210	255	24	18	16	4,40	SNL609TND	SNL511-609	TSN609ND	ASNH511-609	45	41	90	102	155	–	–	–	22210EK	H310	FRB9/90
45	90	60	113	60	25	170	205	20	15	12	3,20	SNL510TG	SNL510-608	TSN510G	ASNH510-608	45	41	90	102	155				C2210K	H310E	FRB9/90
45	90	60	113	60	25	170	205	20	15	12	3,20	SNL510TA	SNL510-608	TSN510A	ASNH510-608	45	48	110	117	165	1310EK	H310	FRB10.5/110	2310K	H2310	FRB4/110
45	90	60	113	60	25	170	205	20	15	12	3,20	SNL510TS	SNL510-608	TSN510S	ASNH510-608	45	48	110	117	165	21310EK	H310	FRB10.5/110	22310EK	H2310	FRB4/110
45	90	60	113	60	25	170	205	20	15	12	3,20	SNL510TND	SNL510-608	TSN510ND	ASNH510-608	45	48	110	117	165				–	–	–
45	105	70	134	70	30	210	255	24	18	16	5,10	SNL610TG	SNL512-610	TSN610G	ASNH512-610	50	44	100	107	165	1211EK	H211	FRB11.5/100	2211EK	H311	FRB9.5/100
45	105	70	134	70	30	210	255	24	18	16	5,10	SNL610TA	SNL512-610	TSN610A	ASNH512-610	50	44	100	107	165	–	–	–	22211EK	H311	FRB9.5/100
45	105	70	134	70	30	210	255	24	18	16	5,10	SNL610TS	SNL512-610	TSN610S	ASNH512-610	50	44	100	107	165				C2211K	H311E	FRB9.5/100
45	105	70	134	70	30	210	255	24	18	16	5,10	SNL610TND	SNL512-610	TSN610ND	ASNH512-610	50	51	120	122	170	1311EK	H311	FRB11/120	2311K	H2311	FRB4/120
50	95	70	128	70	28	210	255	24	18	16	4,40	SNL511TG	SNL511-609	TSN511G	ASNH511-609	50	51	120	122	170	21311EK	H311	FRB11/120	22311EK	H2311	FRB4/120
50	95	70	128	70	28	210	255	24	18	16	4,40	SNL511TA	SNL511-609	TSN511A	ASNH511-609	50	51	120	122	170				–	–	–
50	95	70	128	70	28	210	255	24	18	16	4,40	SNL511TS	SNL511-609	TSN511S	ASNH511-609	55	48	110	117	175	1212EK	H212	FRB13/110	2212EK	H312	FRB10/110
50	95	70	128	70	28	210	255	24	18	16	4,40	SNL511TND	SNL511-609	TSN511ND	ASNH511-609	55	48	110	117	175	–	–	–	22212EK	H312	FRB10/110
50	110	80	149	80	30	230	275	24	18	16	6,50	SNL611TG	SNL513-611	TSN611G	ASNH513-611	55	48	110	117	175				C2212K	H312E	FRB10/110
50	110	80	149	80	30	230	275	24	18	16	6,50	SNL611TA	SNL513-611	TSN611A	ASNH513-611	55	56	130	127	175	1312EK	H312	FRB12.5/130	2312K	H2312	FRB5/130
50	110	80	149	80	30	230	275	24	18	16	6,50	SNL611TS	SNL513-611	TSN611S	ASNH513-611	55	56	130	127	175	21312EK	H312	FRB12.5/130	22312EK	H2312	FRB5/130
50	110	80	149	80	30	230	275	24	18	16	6,50	SNL611TND	SNL513-611	TSN611ND	ASNH513-611	55	56	130	127	175				–	–	–
55	105	70	134	70	30	210	255	24	18	16	5,10	SNL512TG	SNL512-610	TSN512G	ASNH512-610											
55	105	70	134	70	30	210	255	24	18	16	5,10	SNL512TA	SNL512-610	TSN512A	ASNH512-610											
55	105	70	134	70	30	210	255	24	18	16	5,10	SNL512TS	SNL512-610	TSN512S	ASNH512-610											
55	105	70	134	70	30	210	255	24	18	16	5,10	SNL512TND	SNL512-610	TSN512ND	ASNH512-610											
55	115	80	155	80	30	230	280	24	18	16	7,00	SNL612TG	SNL515-612	TSN612G	ASNH515-612											
55	115	80	155	80	30	230	280	24	18	16	7,00	SNL612TA	SNL515-612	TSN612A	ASNH515-612											
55	115	80	155	80	30	230	280	24	18	16	7,00	SNL612TS	SNL515-612	TSN612S	ASNH515-612											
55	115	80	155	80	30	230	280	24	18	16	7,00	SNL612TND	SNL515-612	TSN612ND	ASNH515-612											
60	110	80	149	80	30	230	275	24	18	16	6,50	SNL513TG	SNL513-611	TSN513G	ASNH513-611	60	51	120	122	180	1213EK	H213	FRB14/120	2213EK	H313	FRB10/120
60	110	80	149	80	30	230	275	24	18	16	6,50	SNL513TA	SNL513-611	TSN513A	ASNH513-611	60	51	120	122	180	–	–	–	22213EK	H313	FRB10/120
60	110	80	149	80	30	230	275	24	18	16	6,50	SNL513TS	SNL513-611	TSN513S	ASNH513-611	60	51	120	122	180				C2213K	H313E	FRB10/120
60	110	80	149	80	30	230	275	24	18	16	6,50	SNL513TND	SNL513-611	TSN513ND	ASNH513-611	60	58	140	138	180	1313EK	H313	FRB12.5/140	2313K	H2313	FRB5/140
60	120	90	177	95	32	260	315	28	22	20	9,50	SNL613TG	SNL516-613	TSN613G	ASNH516-613	60	58	140	138	180	21313EK	H313	FRB12.5/140	22313EK	H2313	FRB5/140
60	120	90	177	95	32	260	315	28	22	20	9,50	SNL613TA	SNL516-613	TSN613A	ASNH516-613	60	58	140	138	180				–	–	–
60	120	90	177	95	32	260	315	28	22	20	9,50	SNL613TS	SNL516-613	TSN613S	ASNH516-613	65	56	130	127	175	1215K	H215	FRB15.5/130	2215EK	H315	FRB12.5/130
60	120	90	177	95	32	260	315	28	22	20	9,50	SNL613TND	SNL516-613	TSN613ND	ASNH516-613	65	56	130	127	175		–	–	22215EK	H315	FRB12.5/130
65	115	80	155	80	30	230	280	24	18	16	7,00	SNL515TG	SNL515-612	TSN515G	ASNH515-612	65	56	130	127	175				C2215K	H315E	FRB12.5/130
65	115	80	155	80	30	230	280	24	18	16	7,00	SNL515TA	SNL515-612	TSN515A	ASNH515-612	65	65	160	158	200	1315K	H315	FRB14/160	2315K	H2315	FRB5/160
65	115	80	155	80	30	230	280	24	18	16	7,00	SNL515TS	SNL515-612	TSN515S	ASNH515-612	65	65	160	158	200	21315EK	H315	FRB14/160	22315EK	H2315	FRB5/160
65	115	80	155	80	30	230	280	24	18	16	7,00	SNL515TND	SNL515-612	TSN515ND	ASNH515-612	65	65	160	158	200				C2315K	H2315	FRB5/160
65	140	100	194	100	35	290	345	28	22	20	12,5	SNL615TG	SNL518-615	TSN615G	ASNH518-615	70	58	140	138	205	1216K	H216	FRB16/140	2216EK	H316	FRB12.5/140
65	140	100	194	100	35	290	345	28	22	20	12,5	SNL615TA	SNL518-615	TSN615A	ASNH518-615	70	58	140	138	205		–	–	22216EK	H316	FRB12.5/140
65	140	100	194	100	35	290	345	28	22	20	12,5	SNL615TS	SNL518-615	TSN615S	ASNH518-615	70	58	140	138	205				C2216K	H316E	FRB12.5/140
65	140	100	194	100	35	290	345	28	22	20	12,5	SNL615TND	SNL518-615	TSN615ND	ASNH518-615	70	68	170	163	205	1316K	H316	FRB14.5/170	2316K	H2316	FRB5/170
70	120	90	177	95	32	260	315	28	22	20	9,50	SNL516TG	SNL516-613	TSN516G	ASNH516-613	70	68	170	163	205	21316EK	H316	FRB14.5/170	22316EK	H2316	FRB5/170
70	120	90	177	95	32	260	315	28	22	20	9,50	SNL516TA	SNL516-613	TSN516A	ASNH516-613	70	68	170	163	205				C2316K	H2316	FRB5/170
70	120	90	177	95	32	260	315	28	22	20	9,50	SNL516TS	SNL516-613	TSN516S	ASNH516-613	75	61	150	143	210	1217K	H217	FRB16.5/150	2217K	H317	FRB12.5/150
70	120	90	177	95	32	260	315	28	22	20	9,50	SNL516TND	SNL516-613	TSN516ND	ASNH516-613	75	61	150	143	210			–	22217EK	H317	FRB12.5/150
70	145	100	212	112	35	290	345	28	22	20	13,7	SNL616TG	SNL519-616	TSN616G	ASNH519-616	75	61	150	143	210				C2217K	H317E	FRB12.5/150
70	145	100	212	112	35	290	345	28	22	20	13,7	SNL616TA	SNL519-616	TSN616A	ASNH519-616	75	70	180	178	220	1317K	H317	FRB14.5/180	2317K	H2317	FRB5/180
70	145	100	212	112	35	290	345	28	22	20	13,7	SNL616TS	SNL519-616	TSN616S	ASNH519-616	75	70	180	178	220	21317EK	H317	FRB14.5/180	22317EK	H2317	FRB5/180
70	145	100	212	112	35	290	345	28	22	20	13,7	SNL616TND	SNL519-616	TSN616ND	ASNH519-616	75	70	180	178	220				C2317K	H2317	FRB5/180
75	125	90	183	95	32	260	320	28	22	20	10,0	SNL517TG	SNL517	TSN517G	ASNH517											
75	125	90	183	95	32	260	320	28	22	20	10,0	SNL517TA	SNL517	TSN517A	ASNH517											
75	125	90	183	95	32	260	320	28	22	20	10,0	SNL517TS	SNL517	TSN517S	ASNH517											
75	125	90	183	95	32	260	320	28	22	20	10,0	SNL517TND	SNL517	TSN517ND	ASNH517											
75	160	110	218	112	40	320	380	32	26	24	17,6	SNL617TG	SNL520-617	TSN617G	ASNH520-617											
75	160	110	218	112	40	320	380	32	26	24	17,6	SNL617TA	SNL520-617	TSN617A	ASNH520-617											
75	160	110	218	112	40	320	380	32	26	24	17,6	SNL617TS	SNL520-617	TSN617S	ASNH520-617											
75	160	110	218	112	40	320	380	32	26	24	17,6	SNL617TND	SNL520-617	TSN617ND	ASNH520-617											
80	140	100	194	100	35	290	345	28	22	20	12,5	SNL518TG	SNL518-615	TSN518G	ASNH518-615	80	65	160	158	225	1218K	H218	FRB17.5/160	2218K	H318	FRB12.5/160
80	140	100	194	100	35	290	345	28	22	20	12,5	SNL518TA	SNL518-615	TSN518A	ASNH518-615	80	65	160	158	225	22218EK	H318	FRB12.5/160	23218CCK/W33	H2318	FRB6.25/160

80	140	100	194	100	35	290	345	28	22	20	12,5	SNL518TS	SNL518-615	TSN518S	ASNH518-615	80	65	160	158	225				C2218K	H318E	FRB12.5/160
80	140	100	194	100	35	290	345	28	22	20	12,5	SNL518TND	SNL518-615	TSN518ND	ASNH518-615	85	68	170	163	220	1219K	H219	FRB18/170	2219K	H319	FRB12.5/170
85	145	100	212	112	35	290	345	28	22	20	13,7	SNL519TG	SNL519-616	TSN519G	ASNH519-616	85	68	170	163	220	–	–	–	22219EK	H319	FRB12.5/170
85	145	100	212	112	35	290	345	28	22	20	13,7	SNL519TA	SNL519-616	TSN519A	ASNH519-616	85	68	170	163	220				–	–	–
85	145	100	212	112	35	290	345	28	22	20	13,7	SNL519TS	SNL519-616	TSN519S	ASNH519-616	85	80	200	191	235	1319K	H319	FRB17.5/200	2319K	H2319	FRB6.5/200
85	145	100	212	112	35	290	345	28	22	20	13,7	SNL519TND	SNL519-616	TSN519ND	ASNH519-616	85	80	200	191	235	21319EK	H319	FRB17.5/200	22319EK	H2319	FRB6.5/200
85	175	120	242	125	45	350	410	32	26	24	22,0	SNL619TG	SNL522-619	TSN619G	ASNH522-619	85	80	200	191	235				–	–	–
85	175	120	242	125	45	350	410	32	26	24	22,0	SNL619TA	SNL522-619	TSN619A	ASNH522-619	90	70	180	178	230	1220K	H220	FRB18/180	2220K	H320	FRB12/180
85	175	120	242	125	45	350	410	32	26	24	22,0	SNL619TS	SNL522-619	TSN619S	ASNH522-619	90	70	180	178	230	22220EK	H320	FRB12/180	23220CCK/W33	H2320	FRB4.85/180
85	175	120	242	125	45	350	410	32	26	24	22,0	SNL619TND	SNL522-619	TSN619ND	ASNH522-619	90	70	180	178	230				C2220K	H320E	FRB12/180
90	160	110	218	112	40	320	380	32	26	24	17,6	SNL520TG	SNL520-617	TSN520G	ASNH520-617	90	86	215	199	240	1320K	H320	FRB19.5/215	2320K	H2320	FRB6.5/215
90	160	110	218	112	40	320	380	32	26	24	17,6	SNL520TA	SNL520-617	TSN520A	ASNH520-617	90	86	215	199	240	21320EK	H320	FRB19.5/215	22320EK	H2320	FRB6.5/215
90	160	110	218	112	40	320	380	32	26	24	17,6	SNL520TS	SNL520-617	TSN520S	ASNH520-617	90	86	215	199	240				C2320K	H2320	FRB6.5/215
90	160	110	218	112	40	320	380	32	26	24	17,6	SNL520TND	SNL520-617	TSN520ND	ASNH520-617	100	80	200	191	250	1222K	H222	FRB21/200	2222K	H322	FRB13.5/200
90	185	120	271	140	45	350	410	32	26	24	26,2	SNL620TG	SNL524-620	TSN620G	ASNH524-620	100	80	200	191	250	22222EK	H322	FRB13.5/200	23222CCK/W33	H2322	FRB5.1/200
90	185	120	271	140	45	350	410	32	26	24	26,2	SNL620TA	SNL524-620	TSN620A	ASNH524-620	100	80	200	191	250				C2222K	H322E	FRB13.5/200
90	185	120	271	140	45	350	410	32	26	24	26,2	SNL620TS	SNL524-620	TSN620S	ASNH524-620	110	86	215	199	260	1224K	H3024	FRB22/215	–	–	–
90	185	120	271	140	45	350	410	32	26	24	26,2	SNL620TND	SNL524-620	TSN620ND	ASNH524-620	110	86	215	199	260	22224EK	H3124	FRB14/215	23224CCK/W33	H2324	FRB5/215
100	175	120	242	125	45	350	410	32	26	24	22,0	SNL522TG	SNL522-619	TSN522G	ASNH522-619	110	86	215	199	260				C3224K	H2324L	FRB5/215
100	175	120	242	125	45	350	410	32	26	24	22,0	SNL522TA	SNL522-619	TSN522A	ASNH522-619	115	90	230	208	265	–	–	–	–	–	–
100	175	120	242	125	45	350	410	32	26	24	22,0	SNL522TS	SNL522-619	TSN522S	ASNH522-619	115	90	230	208	265	22226EK	H3126	FRB13/230	23226CCK/W33	H2326	FRB5/230
100	175	120	242	125	45	350	410	32	26	24	22,0	SNL522TND	SNL522-619	TSN522ND	ASNH522-619	115	90	230	208	265				C2226K	H3126L	FRB13/230
110	185	120	271	140	45	350	410	32	26	24	26,2	SNL524TG	SNL524-620	TSN524G	ASNH524-620											
110	185	120	271	140	45	350	410	32	26	24	26,2	SNL524TA	SNL524-620	TSN524A	ASNH524-620											
110	185	120	271	140	45	350	410	32	26	24	26,2	SNL524TS	SNL524-620	TSN524S	ASNH524-620											
110	185	120	271	140	45	350	410	32	26	24	26,2	SNL524TND	SNL524-620	TSN524ND	ASNH524-620											
115	190	130	290	150	50	380	445	35	28	24	33,0	SNL526TG	SNL526	TSN526G	ASNH526											
115	190	130	290	150	50	380	445	35	28	24	33,0	SNL526TA	SNL526	TSN526A	ASNH526											
115	190	130	290	150	50	380	445	35	28	24	33,0	SNL526TS	SNL526	TSN526S	ASNH526											
115	190	130	290	150	50	380	445	35	28	24	33,0	SNL526TND	SNL526	TSN526ND	ASNH526											
125	205	150	302	150	50	420	500	42	35	30	40,0	SNL528TG	SNL528	TSN528G	ASNH528	125	98	250	223	285	22228CCK/W33	H3128	FRB15/250	23228CCK/W33	H2328	FRB5/250
125	205	150	302	150	50	420	500	42	35	30	40,0	SNL528TA	SNL528	TSN528A	ASNH528	125	98	250	223	285				C2228K	H3128L	FRB15/250
125	205	150	302	150	50	420	500	42	35	30	40,0	SNL528TS	SNL528	TSN528S	ASNH528	135	106	270	241	295	22230CCK/W33	H3130	FRB16.5/270	23230CCK/W33	H2330	FRB5/270
125	205	150	302	150	50	420	500	42	35	30	40,0	SNL528TND	SNL528	TSN528ND	ASNH528	135	106	270	241	295				C2230K	H3130L	FRB16.5/270
135	220	160	323	160	60	450	530	42	35	30	49,0	SNL530TG	SNL530	TSN530G	ASNH530	140	114	290	254	315	22232CCK/W33	H3132	FRB17/290	23232CCK/W33	H2332	FRB5/290
135	220	160	323	160	60	450	530	42	35	30	49,0	SNL530TA	SNL530	TSN530A	ASNH530	140	114	290	254	315				C3232K	H2332L	FRB5/290
135	220	160	323	160	60	450	530	42	35	30	49,0	SNL530TS	SNL530	TSN530S	ASNH530											
135	220	160	323	160	60	450	530	42	35	30	49,0	SNL530TND	SNL530	TSN530ND	ASNH530											
140	235	160	344	170	60	470	550	42	35	30	55,0	SNL532TG	SNL532	TSN532G	ASNH532											
140	235	160	344	170	60	470	550	42	35	30	55,0	SNL532TA	SNL532	TSN532A	ASNH532											
140	235	160	344	170	60	470	550	42	35	30	55,0	SNL532TS	SNL532	TSN532S	ASNH532											
140	235	160	344	170	60	470	550	42	35	30	55,0	SNL532TND	SNL532	TSN532ND	ASNH532											